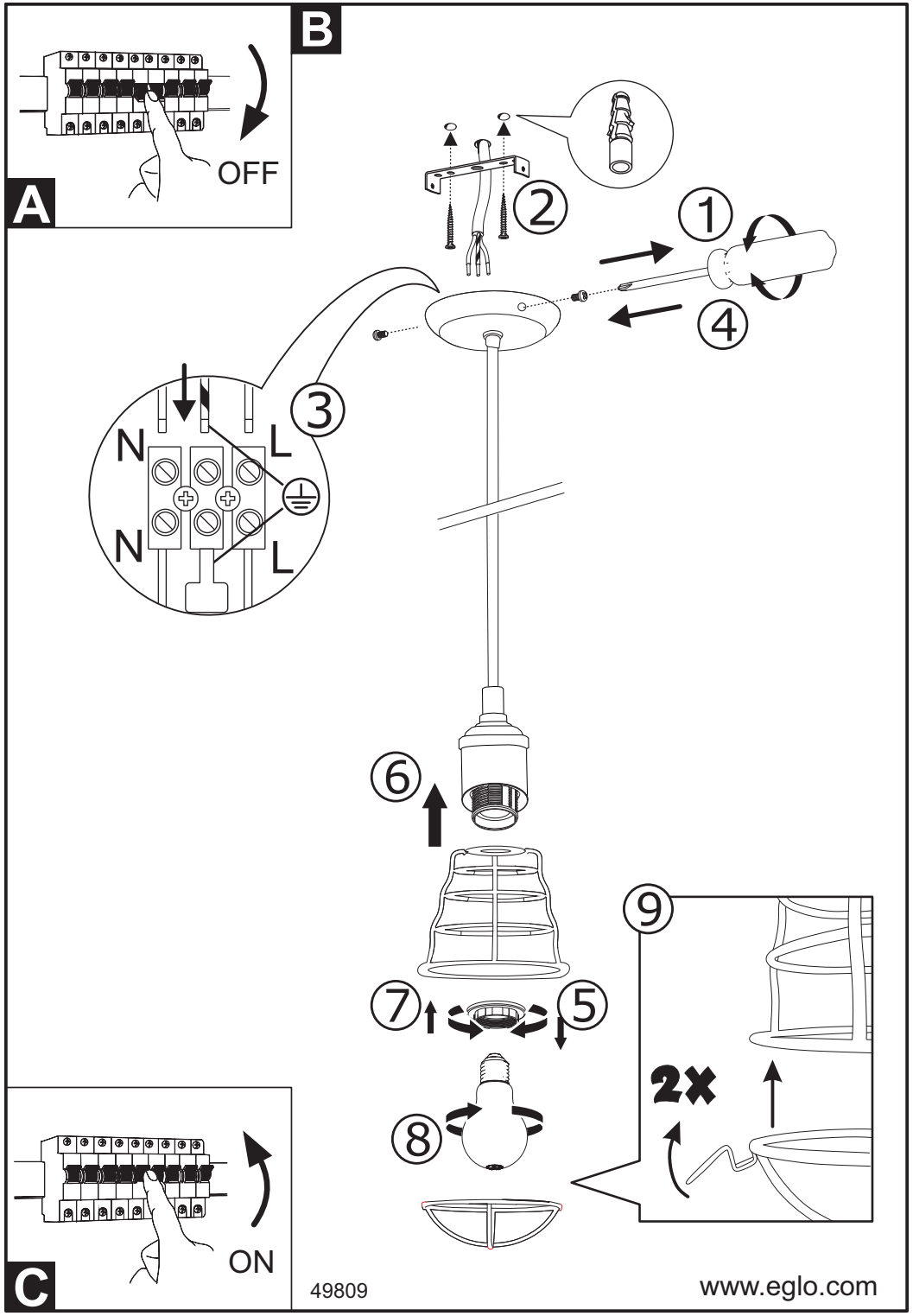
A
OFF
B
1
2
3
4
N
L
N
L
5
6
7
8
9
2x
C
ON
49809
www.eglo.com

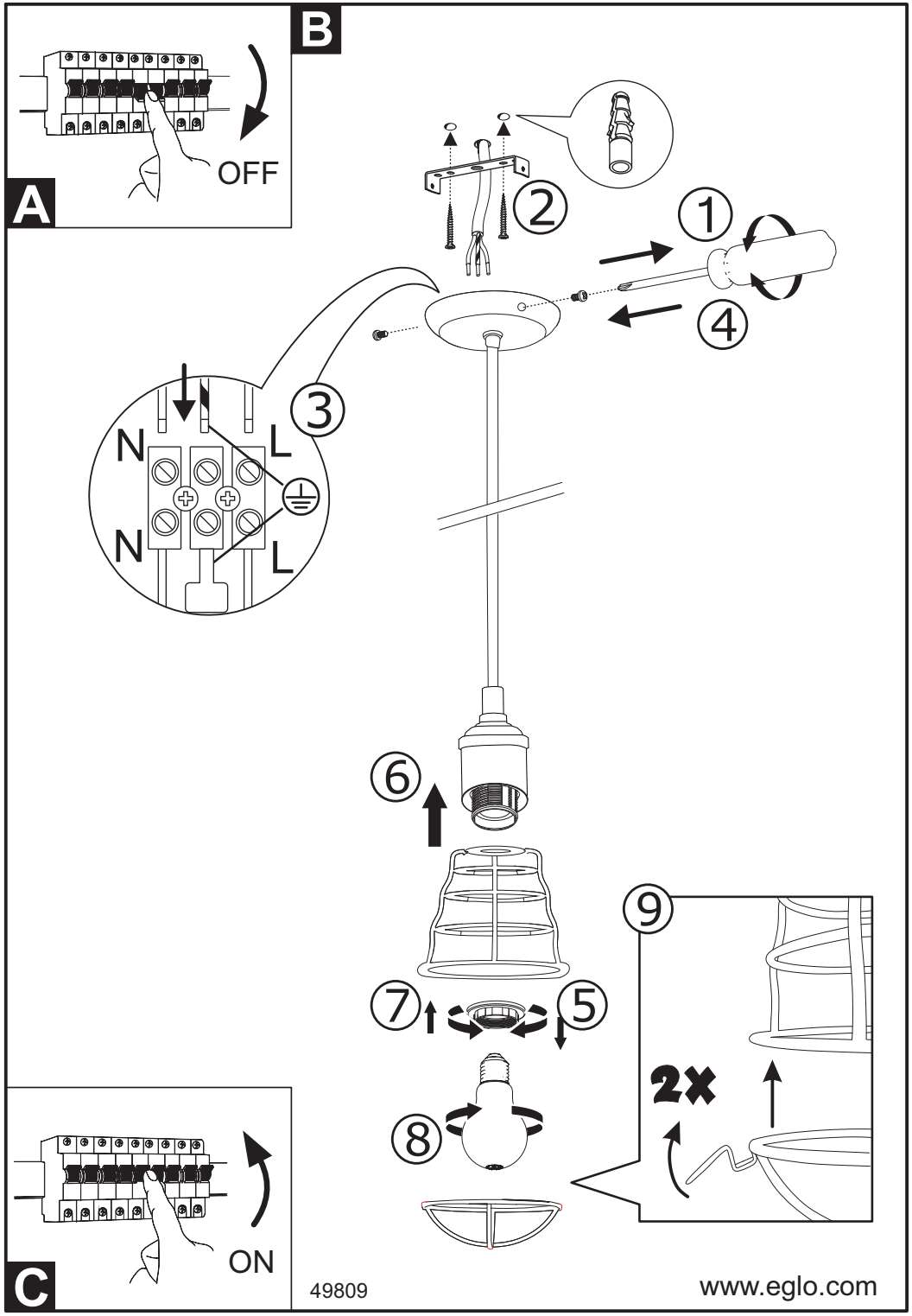
A
OFF
B
1
2
3
4
N
L
N
L
5
6
7
8
9
2x
C
ON
49809
www.eglo.com